Pandora SUSPENDED UP/DOWN RGBW

PF>0,9 IP20

RGBW

Rond pendel LED armatuur met minimalistisch design en directe/indirecte lichtbundel. Voorzien van dimbaar RGBW uplight (CRI>90). Aanstuurbaar via DALI DT8 (slechts 1 BUS adres). RGBW dimming 0-100%. Single color down/RGBW up. Behuizing gemaakt van gebogen aluminium profiel. Verkrijgbaar in wit gelakt (RAL 9003) zwart (RAL 9005) of zilver grijs (RAL 9006). Inclusief plafondrozet en 3 staalkabels (3m) met snoer (3,5m) voor centrale of decentrale ophanging. Geschikt voor toepassing in onder andere winkelcentra, hotels en kantoren. Onderhoudsarm en hoge levensduurverwachting (50.000 uur L80B10). Kleur stabiliteit, Mac Adam <3. Vijf jaar garantie.

Round suspended LED luminaire with minimalistic design and direct/indirect beam angle. Build-in RGBW (CRI>90). RGBW dimming 0-100%. Single color down/RGBW up. Controllable over DALI DT8 protocol (only 1 bus adress per luminaire). Housing made of aluminium profile painted in white (RAL 9003) black (RAL 9005) or silver grey (RAL 9006). Supplied including ceiling cap and 3 steelcables (3m) and wire (3,5m) for central or decentralized suspension. Suitable for shopping centres, hotels and offices. Low maintenance and high life expectancy (50.000 hours L80B10). Colour stability, Mac Adam <3. Warranty 5 years.

Micro Prisma / *Micro Prism*

Wattage Watts	**Kleur** *Colour*	**Lumen down*** *Lumen down**	**CRI** *CRI*	**Diameter (mm)** *Diameter (mm)*	**Hoogte (mm)** *Height (mm)*	**kg** *kg*	**Dali** *Dali*	**Casambi** *Casambi*
24w+7w	3000k	2160	>80	400	80	2,5	26011MP_.40032	26011MP_.40035
41w+12w	3000k	3690	>80	600	80	4	26011MP_.60032	26011MP_.60035
65w+20w	3000k	5850	>80	900	80	8	26011MP_.90032	26011MP_.90035
85w+25w	3000k	7650	>80	1200	80	12	26011MP_.120032	26011MP_.120035
105w+32w	3000k	9900	>80	1500	80	17	26011MP_.150032	26011MP_.150035
140w+42w	3000k	12.600	>80	2000	100	20	26011MP_.200032	26011MP_.200035
180w+54w	3000k	16.200	>80	2500	100	23	26011MP_.250032	26011MP_.250035
220w+66w	3000k	19.800	>80	3000	100	27	26011MP_.300032	26011MP_.300035
350w+105w	3000k	31.500	>80	3500	100	30	26011MP_.350032	26011MP_.350035
24w+7w	4000k	2270	>80	400	80	2,5	26011MP_.40042	26011MP_.40045
41w+12w	4000k	3875	>80	600	80	4	26011MP_.60042	26011MP_.60045
65w+20w	4000k	6145	>80	900	80	8	26011MP_.90042	26011MP_.90045
85w+25w	4000k	8030	>80	1200	80	12	26011MP_.120042	26011MP_.120045
105w+32w	4000k	10.395	>80	1500	80	17	26011MP_.150042	26011MP_.150045
140w+42w	4000k	13.230	>80	2000	100	20	26011MP_.200042	26011MP_.200045
180w+54w	4000k	17.010	>80	2500	100	23	26011MP_.250042	26011MP_.250045
220w+66w	4000k	20.790	>80	3000	100	27	26011MP_.300042	26011MP_.300045
350w+105w	4000k	33.070	>80	3500	100	30	26011MP_.350042	26011MP_.350045

* Lichtstroom van armatuur, tolerantie van +/- 10%

* *Luminaire luminous flux*, tolerance of +/- 10%

_ W=wit / B=zwart / G=grijs

_ W=white / B=black / G=grey

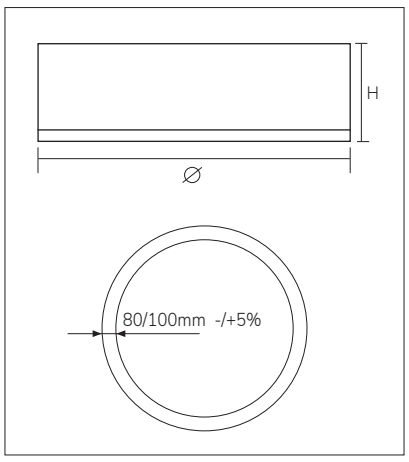

Diameter *Diameter*	**Hoogte** *Height*	**Breedte -/+5%** *Width -/+ 5%*
400	80mm	80 mm
600	80mm	80mm
900	80mm	80mm
1200	80mm	80mm
1500	80mm	80mm
2000	100mm	100mm
2500	100mm	100mm
3000	100mm	100mm
3500	100mm	100mm

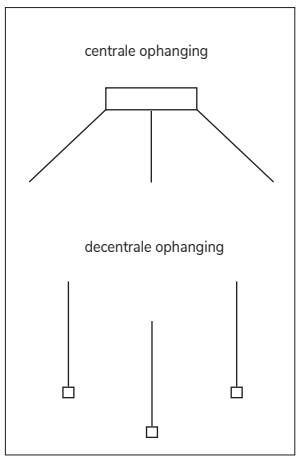



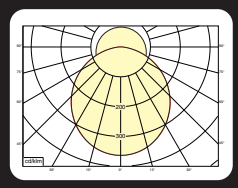

26008.MP_.40030
24w+7w 3000k 2160lm
ηLB 100%

melis lighting

Pandora SUSPENDED UP/DOWN RGBW

Opaal / Opal

Wattage *Watts*	**Kleur** *Colour*	**Lumen down*** *Lumen down**	**CRI** *CRI*	**Diameter (mm)** *Diameter (mm)*	**Hoogte (mm)** *Height (mm)*	**kg** *kg*	**Dali** *Dali*	**Casambi** *Casambi*
24w+7w	3000k	1945	>80	400	80	2,5	26011OP_.40032	26011OP_.40035
41w+12w	3000k	3325	>80	600	80	4	26011OP_.60032	26011OP_.60035
65w+20w	3000k	5270	>80	900	80	8	26011OP_.90032	26011OP_.90035
85w+25w	3000k	6890	>80	1200	80	12	26011OP_.120032	26011OP_.120035
105w+32w	3000k	9450	>80	1500	80	17	26011OP_.150032	26011OP_.150035
140w+42w	3000k	11.340	>80	2000	100	20	26011OP_.200032	26011OP_.200035
180w+54w	3000k	14.580	>80	2500	100	23	26011OP_.250032	26011OP_.250035
220w+66w	3000k	17.820	>80	3000	100	27	26011OP_.300032	26011OP_.300035
350w+105w	3000k	28.350	>80	3500	100	30	26011OP_.350032	26011OP_.350035
24w+7w	4000k	2040	>80	400	80	2,5	26011OP_.40042	26011OP_.40045
41w+12w	4000k	3480	>80	600	80	4	26011OP_.60042	26011OP_.60045
65w+20w	4000k	5520	>80	900	80	8	26011OP_.90042	26011OP_.90045
85w+25w	4000k	7225	>80	1200	80	12	26011OP_.120042	26011OP_.120045
105w+32w	4000k	8935	>80	1500	80	17	26011OP_.150042	26011OP_.150045
140w+42w	4000k	11.910	>80	2000	100	20	26011OP_.200042	26011OP_.200045
180w+54w	4000k	15.305	>80	2500	100	23	26011OP_.250042	26011OP_.250045
220w+66w	4000k	18.715	>80	3000	100	27	26011OP_.300042	26011OP_.300045
350w+105w	4000k	29.760	>80	3500	100	30	26011OP_.350042	26011OP_.350045

* Lichtstroom van armatuur, tolerantie van +/- 10%

* *Luminaire luminous flux*, tolerance of +/- 10%

_ W=wit / B=zwart / G=grijs

_ W=white / B=black / G=grey

