# Pandora SUSPENDED

PF>0,9 IP20

Rond pendel LED armatuur met minimalistisch design. Behuizing gemaakt van gebogen aluminium profiel. Verkrijgbaar in wit gelakt (RAL 9003) zwart (RAL 9005) of zilver grijs (RAL 9006). Inclusief plafondrozet en 3 staalkabels (3m) met snoer (3,5m) voor centrale of decentrale ophanging. Geschikt voor toepassing in onder andere winkelcentra, hotels en kantoren. Onderhoudsarm en hoge levensduurverwachting (100.000 uur L80B10). Kleur stabiliteit, Mac Adam <3. Vijf jaar garantie.

*Round suspended LED luminaire with minimalistic design. Housing made of aluminium profile painted in white (RAL 9003) black (RAL 9005) or silver grey (RAL 9006). Supplied including ceiling cap and 3 steelcables (3m) and wire (3,5m) for central or decentralized suspension. Suitable for shopping centres, hotels and offices. Low maintenance and high life expectancy (100.000 hours L80B10). Colour stability, Mac Adam <3. Warranty 5 years.*



Micro Prisma / *Micro Prism*

| **Wattage** *Watts* | **Kleur** *Colour* | **Lumen*** *Lumen** | **CRI** *CRI* | **Diameter (mm)** *Diameter (mm)* | **Hoogte (mm)** *Height (mm)* | **kg** *kg* | **Artikel nr.** *Article no.* | **Dali** *Dali* | **Casambi** *Casambi* |
|---|---|---|---|---|---|---|---|---|---|
| 24w | 3000k | 2160 | >80 | 400 | 80 | 2 | 26003MP_.40030 | 26003MP_.40032 | 26003MP_.40035 |
| 41w | 3000k | 3690 | >80 | 600 | 80 | 3 | 26003MP_.60030 | 26003MP_.60032 | 26003MP_.60035 |
| 65w | 3000k | 5850 | >80 | 900 | 80 | 6 | 26003MP_.90030 | 26003MP_.90032 | 26003MP_.90035 |
| 85w | 3000k | 7650 | >80 | 1200 | 80 | 10 | 26003MP_.120030 | 26003MP_.120032 | 26003MP_.120035 |
| 105w | 3000k | 9900 | >80 | 1500 | 80 | 15 | 26003MP_.150030 | 26003MP_.150032 | 26003MP_.150035 |
| 140w | 3000k | 12.600 | >80 | 2000 | 100 | 18 | 26003MP_.200030 | 26003MP_.200032 | 26003MP_.200035 |
| 180w | 3000k | 16.200 | >80 | 2500 | 100 | 21 | 26003MP_.250030 | 26003MP_.250032 | 26003MP_.250035 |
| 220w | 3000k | 19.800 | >80 | 3000 | 100 | 24 | 26003MP_.300030 | 26003MP_.300032 | 26003MP_.300035 |
| 350w | 3000k | 31.500 | >80 | 3500 | 100 | 27 | 26003MP_.350030 | 26003MP_.350032 | 26003MP_.350035 |
| 24w | 4000k | 2270 | >80 | 400 | 80 | 2 | 26003MP_.40040 | 26003MP_.40042 | 26003MP_.40045 |
| 41w | 4000k | 3875 | >80 | 600 | 80 | 3 | 26003MP_.60040 | 26003MP_.60042 | 26003MP_.60045 |
| 65w | 4000k | 6145 | >80 | 900 | 80 | 6 | 26003MP_.90040 | 26003MP_.90042 | 26003MP_.90045 |
| 85w | 4000k | 8030 | >80 | 1200 | 80 | 10 | 26003MP_.120040 | 26003MP_.120042 | 26003MP_.120045 |
| 105w | 4000k | 10.395 | >80 | 1500 | 80 | 15 | 26003MP_.150040 | 26003MP_.150042 | 26003MP_.150045 |
| 140w | 4000k | 13.230 | >80 | 2000 | 100 | 18 | 26003MP_.200040 | 26003MP_.200042 | 26003MP_.200045 |
| 180w | 4000k | 17.010 | >80 | 2500 | 100 | 21 | 26003MP_.250040 | 26003MP_.250042 | 26003MP_.250045 |
| 220w | 4000k | 20.790 | >80 | 3000 | 100 | 24 | 26003MP_.300040 | 26003MP_.300042 | 26003MP_.300045 |
| 350w | 4000k | 33.070 | >80 | 3500 | 100 | 27 | 26003MP_.350040 | 26003MP_.350042 | 26003MP_.350045 |

* Lichtstroom van armatuur, tolerantie van +/- 10%

* *Luminaire luminous flux, tolerance of +/- 10%*

_ W=wit / B=zwart / G=grijs

_ W=white / B=black / G=grey

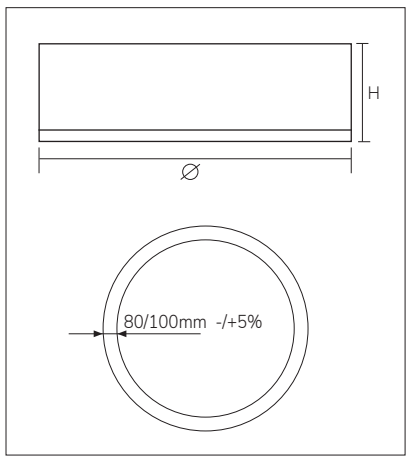


| **Diameter** *Diameter* | **Hoogte** *Height* | **Breedte -/+5%** *Width -/+ 5%* |
|---|---|---|
| 400 | 80mm | 80 mm |
| 600 | 80mm | 80mm |
| 900 | 80mm | 80mm |
| 1200 | 80mm | 80mm |
| 1500 | 80mm | 80mm |
| 2000 | 100mm | 100mm |
| 2500 | 100mm | 100mm |
| 3000 | 100mm | 100mm |
| 3500 | 100mm | 100mm |

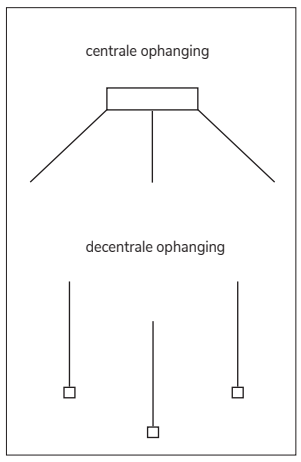


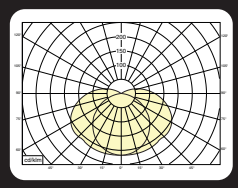

**26003.MP_.40030**
24w 3000k 2160lm
ηLB 100%

**melis** lighting

# Pandora SUSPENDED

Opaal / *Opal*

| **Wattage**<br>*Watts* | **Kleur**<br>*Colour* | **Lumen***<br>*Lumen** | **CRI**<br>*CRI* | **Diameter (mm)**<br>*Diameter (mm)* | **Hoogte (mm)**<br>*Height (mm)* | **kg**<br>*kg* | **Artikel nr.**<br>*Article no.* | **Dali**<br>*Dali* | **Casambi**<br>*Casambi* |
|---|---|---|---|---|---|---|---|---|---|
| 24w | 3000k | 1945 | >80 | 400 | 80 | 2 | 26003OP_.40030 | 26003OP_.40032 | 26003OP_.40035 |
| 41w | 3000k | 3325 | >80 | 600 | 80 | 3 | 26003OP_.60030 | 26003OP_.60032 | 26003OP_.60035 |
| 65w | 3000k | 5270 | >80 | 900 | 80 | 6 | 26003OP_.90030 | 26003OP_.90032 | 26003OP_.90035 |
| 85w | 3000k | 6890 | >80 | 1200 | 80 | 10 | 26003OP_.120030 | 26003OP_.120032 | 26003OP_.120035 |
| 105w | 3000k | 9405 | >80 | 1500 | 80 | 15 | 26003OP_.150030 | 26003OP_.150032 | 26003OP_.150035 |
| 140w | 3000k | 11.340 | >80 | 2000 | 100 | 18 | 26003OP_.200030 | 26003OP_.200032 | 26003OP_.200035 |
| 180w | 3000k | 14.580 | >80 | 2500 | 100 | 21 | 26003OP_.250030 | 26003OP_.250032 | 26003OP_.250035 |
| 220w | 3000k | 17.820 | >80 | 3000 | 100 | 24 | 26003OP_.300030 | 26003OP_.300032 | 26003OP_.300035 |
| 350w | 3000k | 28.350 | >80 | 3500 | 100 | 27 | 26003OP_.350030 | 26003OP_.350032 | 26003OP_.350035 |
| 24w | 4000k | 2040 | >80 | 400 | 80 | 2 | 26003OP_.40040 | 26003OP_.40042 | 26003OP_.40045 |
| 41w | 4000k | 3480 | >80 | 600 | 80 | 3 | 26003OP_.60040 | 26003OP_.60042 | 26003OP_.60045 |
| 65w | 4000k | 5520 | >80 | 900 | 80 | 6 | 26003OP_.90040 | 26003OP_.90042 | 26003OP_.90045 |
| 85w | 4000k | 7225 | >80 | 1200 | 80 | 10 | 26003OP_.120040 | 26003OP_.120042 | 26003OP_.120045 |
| 105w | 4000k | 8935 | >80 | 1500 | 80 | 15 | 26003OP_.150040 | 26003OP_.150042 | 26003OP_.150045 |
| 140w | 4000k | 11.910 | >80 | 2000 | 100 | 18 | 26003OP_.200040 | 26003OP_.200042 | 26003OP_.200045 |
| 180w | 4000k | 15.305 | >80 | 2500 | 100 | 21 | 26003OP_.250040 | 26003OP_.250042 | 26003OP_.250045 |
| 220w | 4000k | 18.715 | >80 | 3000 | 100 | 24 | 26003OP_.300040 | 26003OP_.300042 | 26003OP_.300045 |
| 350w | 4000k | 29.760 | >80 | 3500 | 100 | 27 | 26003OP_.350040 | 26003OP_.350042 | 26003OP_.350045 |

* Lichtstroom van armatuur, tolerantie van +/- 10%

_ W=wit / B=zwart / G=grijs

* *Luminaire luminous flux, tolerance of +/- 10%*

_ W=white / B=black / G=grey



melis lighting