Pandora SUSPENDED UP/DOWN

PF>0,9 IP20

Rond pendel LED armatuur met minimalistisch design en directe/indirecte lichtbundel. Behuizing gemaakt van gebogen aluminium profiel. Verkrijgbaar in wit gelakt (RAL 9003) zwart (RAL 9005) of zilver grijs (RAL 9006). Inclusief plafondrozet en 3 staalkabels (3m) met snoer (3,5m) voor centrale of decentrale ophanging.. Geschikt voor toepassing in onder andere winkelcentra, hotels en kantoren. Onderhoudsarm en hoge levensduurverwachting (100.000 uur L80B10). Kleur stabiliteit, Mac Adam <3. Vijf jaar garantie.

Round suspended LED luminaire with minimalistic design and direct/indirect beam angle. Housing made of aluminium profile painted in white (RAL 9003) black (RAL 9005) or silver grey (RAL 9006). Supplied including ceiling cap and 3 steelcables (3m) and wire (3,5m) for central or decentralized suspension.. Suitable for shopping centres, hotels and offices. Low maintenance and high life expectancy (100.000 hours L80B10). Colour stability, Mac Adam <3. Warranty 5 years.

Micro Prisma / *Micro Prism*

Wattage *Watts*	**Kleur** *Colour*	**Lumen*** *Lumen**	**CRI** *CRI*	**Diameter (mm)** *Diameter (mm)*	**Hoogte (mm)** *Height (mm)*	**kg** kg	**Artikel nr.** *Article no.*	**Dali** *Dali*	**Casambi** *Casambi*
24w+7w	3000k	2790	>80	400	80	2,5	26008MP_.40030	26008MP_.40032	26008MP_.40035
41w+12w	3000k	4770	>80	600	80	4	26008MP_.60030	26008MP_.60032	26008MP_.60035
65w+20w	3000k	7650	>80	900	80	8	26008MP_.90030	26008MP_.90032	26008MP_.90035
85w+25w	3000k	9900	>80	1200	80	12	26008MP_.120030	26008MP_.120032	26008MP_.120035
105w+32w	3000k	12.330	>80	1500	80	17	26008MP_.150030	26008MP_.150032	26008MP_.150035
140w+42w	3000k	16.380	>80	2000	100	20	26008MP_.200030	26008MP_.200032	26008MP_.200035
180w+54w	3000k	21.060	>80	2500	100	23	26008MP_.250030	26008MP_.250032	26008MP_.250035
220w+66w	3000k	25.740	>80	3000	100	27	26008MP_.300030	26008MP_.300032	26008MP_.300035
350w+105w	3000k	40.950	>80	3500	100	30	26008MP_.350030	26008MP_.350032	26008MP_.350035
24w+7w	4000k	2930	>80	400	80	2,5	26008MP_.40040	26008MP_.40042	26008MP_.40045
41w+12w	4000k	5010	>80	600	80	4	26008MP_.60040	26008MP_.60042	26008MP_.60045
65w+20w	4000k	8030	>80	900	80	8	26008MP_.90040	26008MP_.90042	26008MP_.90045
85w+25w	4000k	10.395	>80	1200	80	12	26008MP_.120040	26008MP_.120042	26008MP_.120045
105w+32w	4000k	12.945	>80	1500	80	17	26008MP_.150040	26008MP_.150042	26008MP_.150045
140w+42w	4000k	17.200	>80	2000	100	20	26008MP_.200040	26008MP_.200042	26008MP_.200045
180w+54w	4000k	22.115	>80	2500	100	23	26008MP_.250040	26008MP_.250042	26008MP_.250045
220w+66w	4000k	27.025	>80	3000	100	27	26008MP_.300040	26008MP_.300042	26008MP_.300045
350w+105w	4000k	43.000	>80	3500	100	30	26008MP_.350040	26008MP_.350042	26008MP_.350045

* Lichtstroom van armatuur, tolerantie van +/- 10%

* *Luminaire luminous flux, tolerance of +/- 10%*

_ W=wit / B=zwart / G=grijs

_ W=white / B=black / G=grey

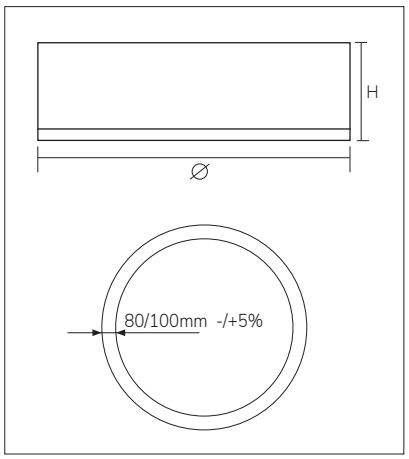

Diameter *Diameter*	**Hoogte** *Height*	**Breedte -/+5%** *Width -/+ 5%*
400	80mm	80 mm
600	80mm	80mm
900	80mm	80mm
1200	80mm	80mm
1500	80mm	80mm
2000	100mm	100mm
2500	100mm	100mm
3000	100mm	100mm
3500	100mm	100mm

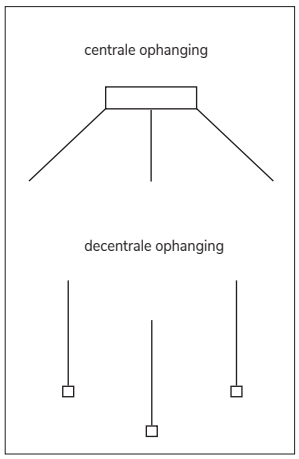



Opties:
- Indirecte lichtbundel RGB dimbaar 0-100%

Options:
- *Uplight RGB dimming 0-100%*

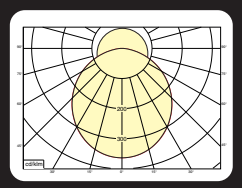

26008.MP_.40030
24w+7w 3000k 2790lm
ηLB 100%

melis lighting

Pandora SUSPENDED UP/DOWN

Opaal / *Opal*

Wattage *Watts*	**Kleur** *Colour*	**Lumen*** *Lumen**	**CRI** *CRI*	**Diameter (mm)** *Diameter (mm)*	**Hoogte (mm)** *Height (mm)*	**kg** *kg*	**Artikel nr.** *Article no.*	**Dali** *Dali*	**Casambi** *Casambi*
24w+7w	3000k	2650	>80	400	80	2,5	26008OP_.40030	26008OP_.40032	26008OP_.40035
41w+12w	3000k	4530	>80	600	80	4	26008OP_.60030	26008OP_.60032	26008OP_.60035
65w+20w	3000k	7270	>80	900	80	8	26008OP_.90030	26008OP_.90032	26008OP_.90035
85w+25w	3000k	9405	>80	1200	80	12	26008OP_.120030	26008OP_.120032	26008OP_.120035
105w+32w	3000k	11715	>80	1500	80	17	26008OP_.150030	26008OP_.150032	26008OP_.150035
140w+42w	3000k	15.560	>80	2000	100	20	26008OP_.200030	26008OP_.200032	26008OP_.200035
180w+54w	3000k	18.910	>80	2500	100	23	26008OP_.250030	26008OP_.250032	26008OP_.250035
220w+66w	3000k	24.455	>80	3000	100	27	26008OP_.300030	26008OP_.300032	26008OP_.300035
350w+105w	3000k	38.905	>80	3500	100	30	26008OP_.350030	26008OP_.350032	26008OP_.350035
24w+7w	4000k	2790	>80	400	80	2,5	26008OP_.40040	26008OP_.40042	26008OP_.40045
41w+12w	4000k	4770	>80	600	80	4	26008OP_.60040	26008OP_.60042	26008OP_.60045
65w+20w	4000k	7650	>80	900	80	8	26008OP_.90040	26008OP_.90042	26008OP_.90045
85w+25w	4000k	9900	>80	1200	80	12	26008OP_.120040	26008OP_.120042	26008OP_.120045
105w+32w	4000k	12.330	>80	1500	80	17	26008OP_.150040	26008OP_.150042	26008OP_.150045
140w+42w	4000k	16.380	>80	2000	100	20	26008OP_.200040	26008OP_.200042	26008OP_.200045
180w+54w	4000k	21.060	>80	2500	100	23	26008OP_.250040	26008OP_.250042	26008OP_.250045
220w+66w	4000k	25.740	>80	3000	100	27	26008OP_.300040	26008OP_.300042	26008OP_.300045
350w+105w	4000k	40.950	>80	3500	100	30	26008OP_.350040	26008OP_.350042	26008OP_.350045

* Lichtstroom van armatuur, tolerantie van +/- 10%

_ W=wit / B=zwart / G=grijs

* *Luminaire luminous flux*, tolerance of +/- 10%

_ W=white / B=black / G=grey

